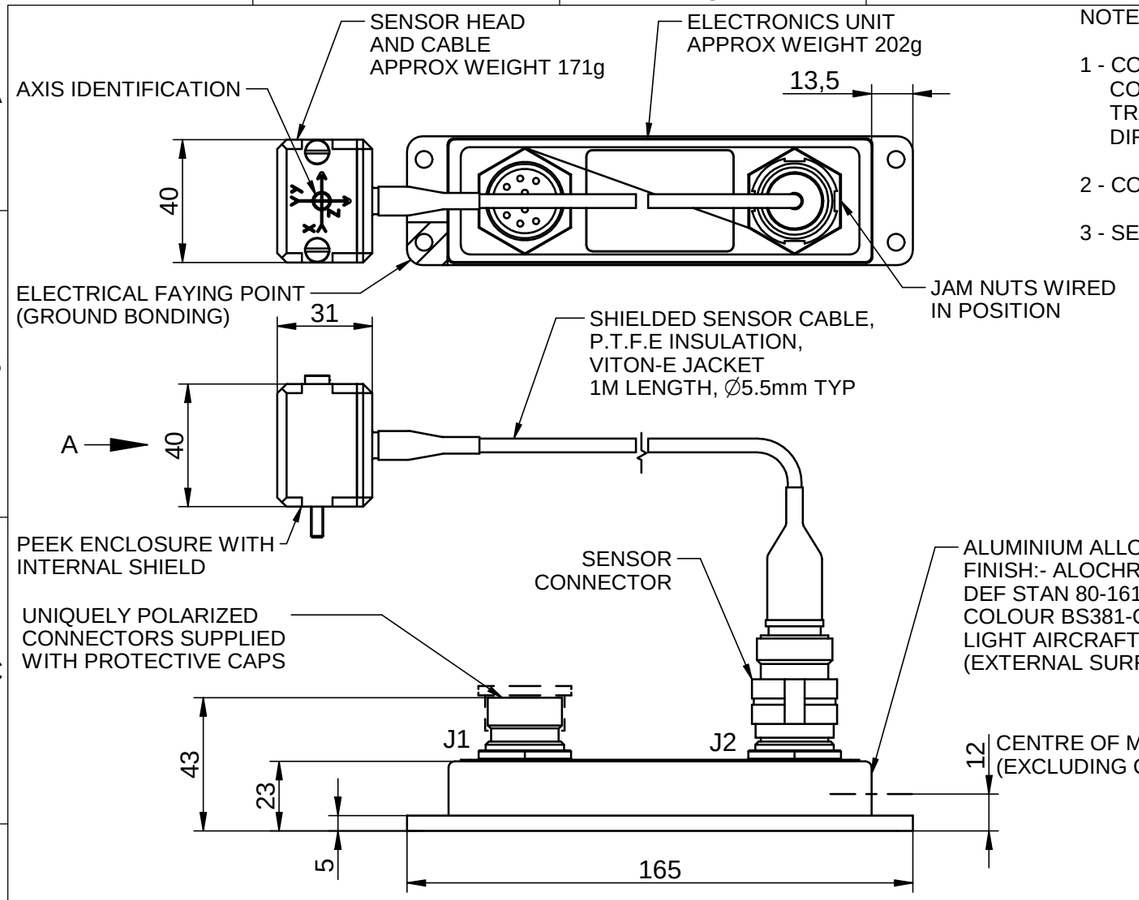

NOTES:

1 - CONVENTIONS X, Y, Z RIGHT HAND SYSTEM CORRESPONDS TO:-
TRANSVERSE, LONGITUDINAL AND VERTICAL DIRECTIONS RESPECTIVELY.

2 - CONNECTOR J2 RECEIVES SENSOR CONNECTOR.

3 - SENSOR AND ELECTRONICS UNIT ARE MATCHED UNITS.

VIEW ON ARROW A

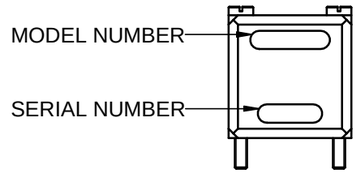

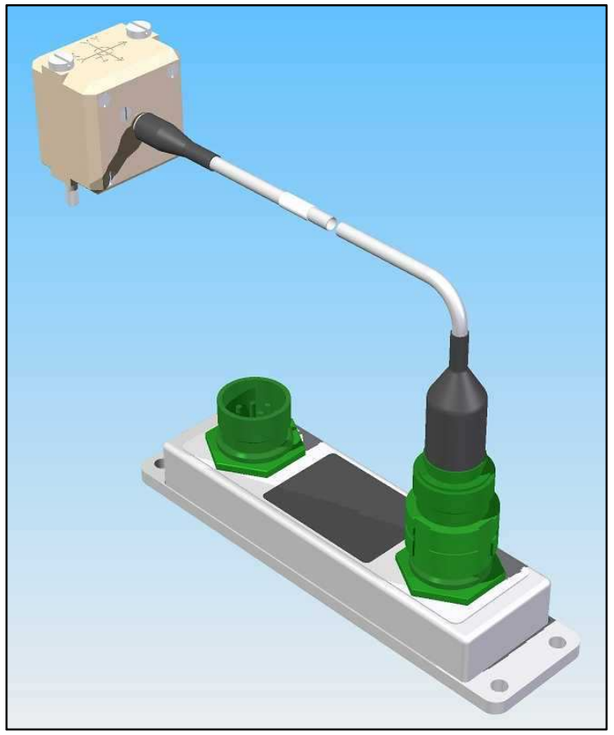

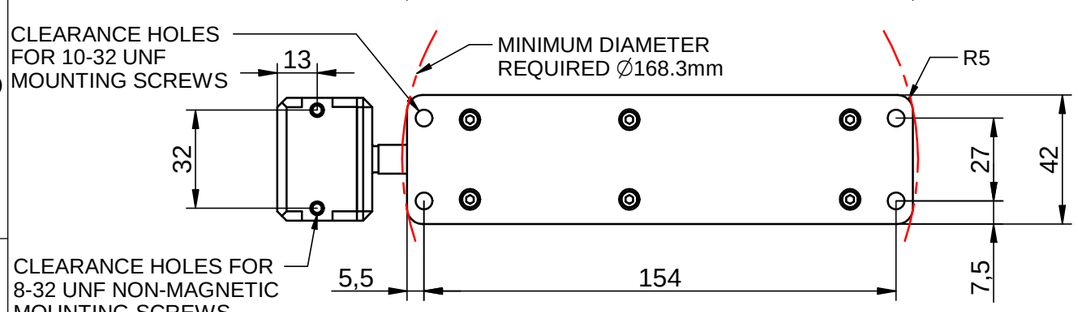

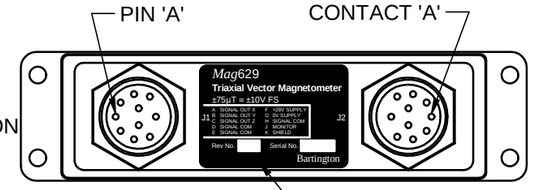

VIEW SHOWING
CONNECTOR ORIENTATION
AND LABEL DETAILS

LABEL SHOWING MANUFACTURER
PRODUCT CODE, REVISION NUMBER,
SERIAL NUMBER, ELECTRICAL
CONNECTION PIN ASSIGNMENTS
AND MEASURING RANGE.

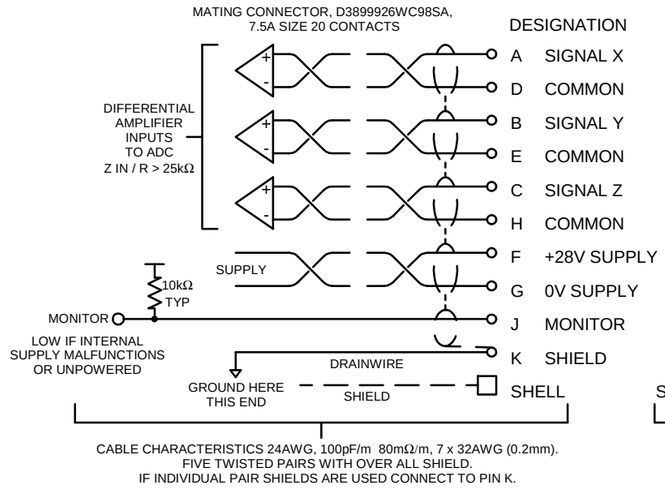

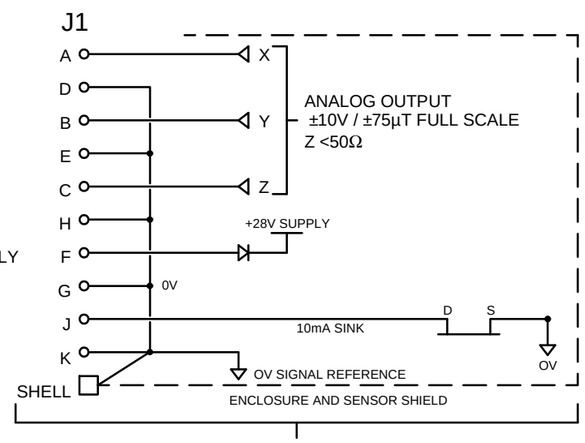

THIS DOCUMENT AND THE INFORMATION CONTAINED IN IT IS COMMERCIAL IN CONFIDENCE. IT MAY NOT BE REPRODUCED, COPIED OR TRANSMITTED TO ANY THIRD PARTY, IN ANY MEDIUM, WITHOUT THE PRIOR WRITTEN PERMISSION OF BARTINGTON INSTRUMENTS LTD. COPYRIGHT AND DESIGN RIGHT BARTINGTON INSTRUMENTS LTD 2021.

Title: **Mag629 Outline Drawing**	Third Angle Projection		Project: D629
	Dimensions in mm	Size A3	Sheet 1/1
	Created by: *PS*		Pre-2010
	Modified by: *Nicholas Avery*		16/04/2019
	Approved by: *Daniel Cetnik*		16/04/2019
Revisions: Drawing template updated. Customer name removed	Drawing No.: **DR2102**	Issue: 12	DCN No.: 1819

BI OUTLINE DRAFT A3 v9